Microliter centrifuges

# MIKRO 2.0 | 2.0 R

## Compact, precise, easy to control

The MIKRO 2.0 | 2.0 R combines performance and ease of use in a compact design. The combination of push-turn control and a high-resolution LCD display facilitates quick and easy operation. Thanks to new features such as the quick-change rotor system, the quick-release lid lock and near-field communication (NFC) technology, it speeds up work processes and ensures greater efficiency. With a maximum relative centrifugal force (RCF) of 25,212 and, in their cooled versions, a temperature range of -20 to +40 °C, the MIKRO 2.0 and MIKRO 2.0 R offer maximum performance combined with maximum flexibility.

## Highlights

- max. RPM: 16,100 min $^{-1}$
- max. RCF: 25,212
- max. capacity: 24 x 2.0 ml / 12 x 5 ml
- 5 rotors to choose from
- As General Purpose Device or compliant with the In Vitro Diagnostic Regulation (EU) 2017/746
- Easy to use thanks to 3.5 inch LCD display and push-turn control including display of all relevant parameters, program menu, error display
- Tool-free quick-change rotor system
- Bio-tight quick-release rotor lid lock with safety catch to prevent unintentional release of the lid when carrying the rotor
- Automatic rotor detection in standstill conditions
- Cycle count detection in the rotor using NFC technology, independent of the centrifuge
- 99 program memory locations
- 10 individual start and 11 stop levels
- Model 2.0 R adjustable from -20 to +40 °C with intelligent pre-cooling function lasting 6 minutes (at room temperature 22 °C)

## Features

- Metal housing and cover
- Sight glass in the lid
- Motorized lid lock
- Lid drop protection
- Emergency release
- Stainless steel basket
- Extended voltage range power supply unit
- Durable synchronous motor
- Unbalance monitoring and shutdown
- "Quick Spin button" for short-duration centrifugation
- Display in °C and °F possible
- Natural refrigerant (R290)
- Display stand-by mode
- User interface available in 26 languages
- Shortest start-up and stopping times thanks to synchronous motor
- Automatic centrifugation start after lid closure or automatic lid opening after centrifugation run complete (adjustable)

## Technical data

| | **MIKRO 2.0**<br>non-refrigerated | **MIKRO 2.0 R**<br>refrigerated |
|---|---|---|
| voltage *) | 100- 240 V 1 ~ | 100- 240 V 1 ~ |
| frequency | 50 – 60 Hz | 50 – 60 Hz |
| consumption | 270 VA | 420 VA |
| emission, immunity | EN/IEC 61326-1, Class B | EN/IEC 61326-1, Class B |
| max. capacity | 24 x 2,0 ml / 12 x 5 ml | 24 x 2,0 ml / 12 x 5 ml |
| max. RPM | 16.100 $min^{-1}$ | 16.100 $min^{-1}$ |
| max. RCF | 25.212 | 25.212 |
| running time | 99 h, 59 min, 59 se, continuous run, short cycle mode (impulse button) | 99 h, 59 min, 59 se, continuous run, short cycle mode (impulse button) |
| dimesions (W x D x H) | 240 x 389 x 225 mm | 240 x 538 x 250 mm |
| weight | approx. 18 kg | approx. 30 kg |
| noise level | ≤ 57 dB (A) with rotor 2414 | ≤ 57 dB (A) with rotor 2414 |
| temperature control, infinitely variable | - | from -20 to +40 °C |
| **Cat. No.** – IVDR | **2404** | **2406** |
| **Cat. No.** – General Purpose (GP) | **2440** | **2460** |

## Available rotors

| **ANGLE ROTORS** | | angle | max. RPM | max. capacity | Cat. No. | page |
|---|---|---|---|---|---|---|
| | angle rotor, 24-place | 45° | 16,100 $min^{-1}$ | 24 x 2.0 ml | **2414** | 3 |
| | angle rotor, 24-place for spin column kits | 45° | 14,600 $min^{-1}$ | 24 x spin columns | **2415** | 3 |
| | angle rotor, 20-place for cryo tubes | 45° | 14,600 $min^{-1}$ | 20 x cryo tubes | **2419** | 4 |
| | angle rotor, 12-place | 45° | 14,900 $min^{-1}$ | 12 x 5 ml | **2413** | 4 |
| | angle rotor, 8-place for PCR strips | 45° | 15,400 $min^{-1}$ | 8 x 8 PCR strips | **1540** | 5 |

## Angle rotor, 24-place | 2414

| Rotor | |
|---|---|
| max. RPM I max. RCF | 16,100 min$^{-1}$ I 25,212 |
| max. capacity | 24 x 2 ml |
| run up I run down, braked in sec | 11 I 11 |
| angle I max. noise level | 45° I 57 dB (A) |
| temperature in °C[1] | +1.2 |
| **Cat. No.** | **2434** |

| Lid bioseal [5] | |
|---|---|
| **Cat. No.** | **INCLUSIVE** |

| | microliter tubes | | | | | | Pediatric |
|---|---|---|---|---|---|---|---|
| **Vessels** | | | | | | | 8) |
| capacity in ml | 0.2 | 0.4 | 0.5 | 0.8 | 1.5 | 2.0 | 0.5 |
| Ø x L in mm | 6 x 18 | 6 x 45 | 8 x 30 | 8 x 45 | 11 x 38 | 11 x 38 | 10,7 x 46 |
| max. RCF[2] | 25,212 | 25,212 | 25,212 | 25,212 | 25,212 | 25,212 | 25,212 |
| radius in mm | 87 | 87 | 87 | 87 | 87 | 87 | 87 |
| **Adapter** | | | | | | | |
| boring Ø x L in mm | 6 x 40 | 6 x 40 | 8 x 40 | 8 x 40 | 10.2 x 19.3 | 11.2x42.6 | 11.2 x 39 |
| vessels per rotor | 24 | 24 | 24 | 24 | 24 | 24 | 12 |
| **Cat. No.** | **2024** | **2024** | **2023** | **2023** | **2031[7]** | **-** | **0788** |

## Angle rotor, 24-place | 2415

| Rotor | |
|---|---|
| max. RPM I max. RCF | 14,600 min$^{-1}$ I 20,733 |
| max. capacity | 24 x 2 ml |
| run up I run down, braked in sec | 9 I 10 |
| angle I max. noise level | 45° I 57 dB (A) |
| temperature in °C[1] | -2.6 |
| **Cat. No.** | **2415** |

| Lid bioseal [5] | |
|---|---|
| **Cat. No.** | **INCLUSIVE** |

| | microliter tubes | | | | | | micro spin columns | | Pediatric |
|---|---|---|---|---|---|---|---|---|---|
| **Vessels** | | | | | | | 8) | | 8) |
| capacity in ml | 0.2 | 0.4 | 0.5 | 0.8 | 1.5 | 2.0 | 0.6 | 0.8 | 0.5 |
| Ø x L in mm | 6 x 18 | 6 x 45 | 8 x 30 | 8 x 45 | 11 x 38 | 11 x 38 | 11 x 50 | 11 x 38 | 10.7 x 46 |
| max. RCF[2] | 20,733 | 20,733 | 20,733 | 20,733 | 20,733 | 20,733 | 20,733 | 20,733 | 19,303 |
| radius in mm | 85 | 85 | 85 | 85 | 85 | 85 | 85 | 85 | 81 |
| **Adapter** | | | | | | | | | |
| boring Ø x L in mm | 6 x 40 | 6 x 40 | 8 x 40 | 8 x 40 | 10.2 x 19.3 | 11.2x42.6 | - | - | 11.2 x 39 |
| vessels per rotor | 24 | 24 | 24 | 24 | 24 | 24 | 12 | 24 | 12 |
| **Cat. No.** | **2024** | **2024** | **2023** | **2023** | **2031[7]** | **-** | **-** | **-** | **0788** |

1) For cooled versions: Lowest temperature achievable with precooling and max. speed.
2) Please note that the RCF values indicated refer only to rotor performance. The max. permissible RCF of tubes used should be verified with the individual manufacturers.
5) Tested by the TÜV in conformity with DIN EN 61010, section 2 - 020.
7) For centrifugation at high speeds, we recommend to use conical, phenol-resistant adapters. Cat. No. 2031.
8) Only every second place can be occupied.

## Angle rotor, 20-place | 2419

| Rotor | |
|---|---|
| max. RPM I max. RCF | 14,600 min$^{-1}$ I 20,018 |
| max. capacity | 20 x 1.8 ml |
| run up I run down, braked in sec | 9 I 10 |
| angle I max. noise level | 45° I 57 dB (A) |
| temperature in °C[1] | -3.4 |
| **Cat. No.** | **2419** |

| Lid bioseal [5] | |
|---|---|
| **Cat. No.** | **INCLUSIVE** |

| | cryo tubes | |
|---|---|---|
| **Vessels** | | |
| capacity in ml | 1.0 | 1.8 |
| Ø x L in mm | 12.5 x 41 | 12.5 x 48 |
| max. RCF[2] | 20,018 | 20,018 |
| radius in mm | 84 | 84 |
| **Adapter** | | |
| boring Ø x L in mm | - | - |
| vessels per rotor | 20 | 20 |
| **Cat. No.** | **-** | **-** |

## Angle rotor, 8-place | 2418-A

| Rotor | |
|---|---|
| max. RPM I max. RCF | 15,400 min$^{-1}$ I 20,151 |
| max. capacity | 8 x 8 PCR strips |
| run up I run down, braked in sec | 9 I 10 |
| angle I max. noise level | 45° I 57 dB (A) |
| temperature in °C[1] | -2.1 |
| **Cat. No.** | **2418-A** |

| Lid bioseal [5] | |
|---|---|
| **Cat. No.** | **INCLUSIVE** |

| | | PCR tubes/strips | |
|---|---|---|---|
| **Vessels** | | | |
| capacity in ml | | 0,2 | 0,2 |
| Ø x L in mm | | 6.2 x 20 | 6.2 x 20 x 8 |
| max. RCF[2] [14] | top row | 18,295 | 20,151 |
| | bottom row | 16,439 | 18,560 |
| radius in mm [14] | top row | 69 | 76 |
| | bottom row | 62 | 70 |
| **Adapter** | | | |
| boring Ø x L in mm | | - | - |
| vessels per rotor | | 64 | 8 x 8 |
| **Cat. No.** | | **-** | **-** |

1) For cooled versions: Lowest temperature achievable with precooling and max. speed.
2) Please note that the RCF values indicated refer only to rotor performance. The max. permissible RCF of tubes used should be verified with the individual manufacturers.
5) Tested by the TÜV in conformity with DIN EN 61010, section 2 - 020.
14) Radius min. horizontal distance from the rotor axis to the bore tip, radius max. inclined distance from the rotor axis to the outer bore tip.

## Angle rotor, 12-place | 2413

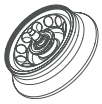

| Rotor | |
|---|---|
| max. RPM I max. RCF | 14,900 min⁻¹ I 21,098 |
| max. capacity | 12 x 5 ml |
| run up I run down, braked in sec | 12 I 13 |
| angle I max. noise level | 45° I 57 dB (A) |
| temperature in °C[1] | -1.0 |
| **Cat. No.** | **2413** |

+

| Lid bioseal [5] | |
|---|---|
| **Cat. No.** | **INCLUSIVE** |

| Vessels | microliter-tubes |
|---|---|
| capacity in ml | 5 |
| Ø x L in mm | 17 x 59 |
| max. RCF[2] | 21,098 |
| radius in mm | 85 |

+

| Adapter | |
|---|---|
| boring Ø x L in mm | - |
| vessels per rotor | 12 |
| **Cat. No.** | **-** |

1) For cooled versions: Lowest temperature achievable with precooling and max. speed.
2) Please note that the RCF values indicated refer only to rotor performance. The max. permissible RCF of tubes used should be verified with the individual manufacturers.
5) Tested by the TÜV in cor ormity wit ı DIN EN 61010, section 2 - 020.

## Certifications / Registrations

Product certification:

Product registration:

IVDR CONFORM according to regulation (EU) 2017/746

GENERAL PURPOSE

Company certifications:

## Dimensions – MIKRO 2.0

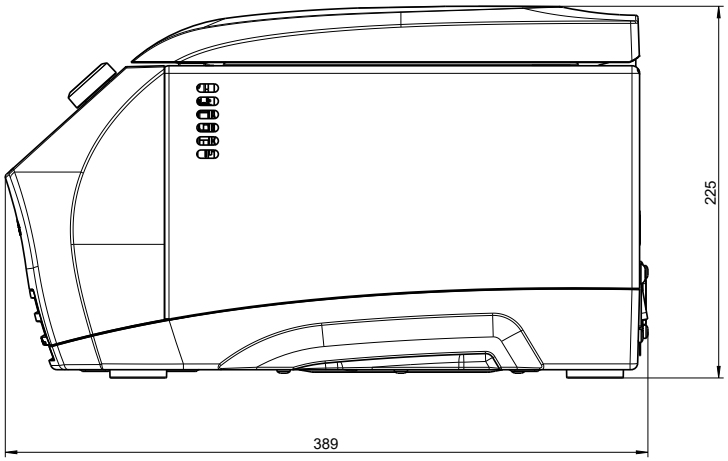


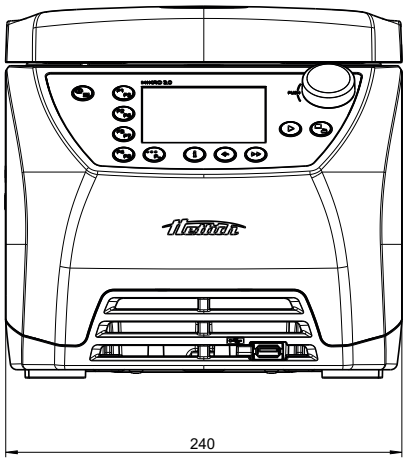

## Dimensions – MIKRO 2.0 R

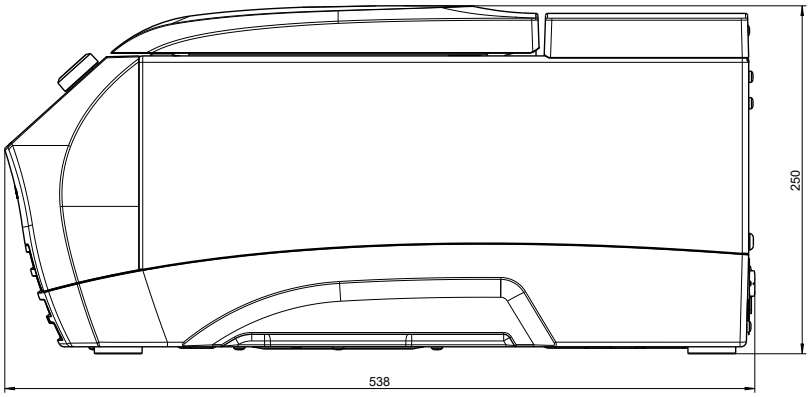


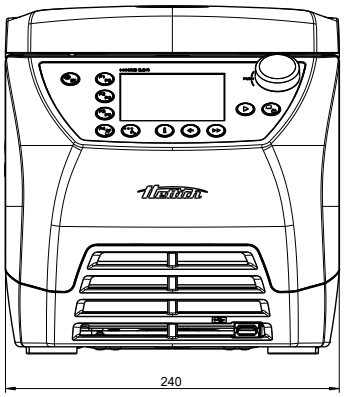

WolfLabs

**Pricing on any accessories shown can be found by keying the part number into the search box on our website.**

The specifications listed in this brochure are subject to change by the manufacturer and therefore cannot be guaranteed to be correct.
If there are aspects of the specification that must be guaranteed, please provide these to our sales team so that details can be confirmed.


www.wolflabs.co.uk

Tel : 01759 301142

Fax : 01759 301143

sales@wolflabs.co.uk


Please contact us if this literature doesn't answer all your questions.